Efka dc1500

CONTROL AB295A5600

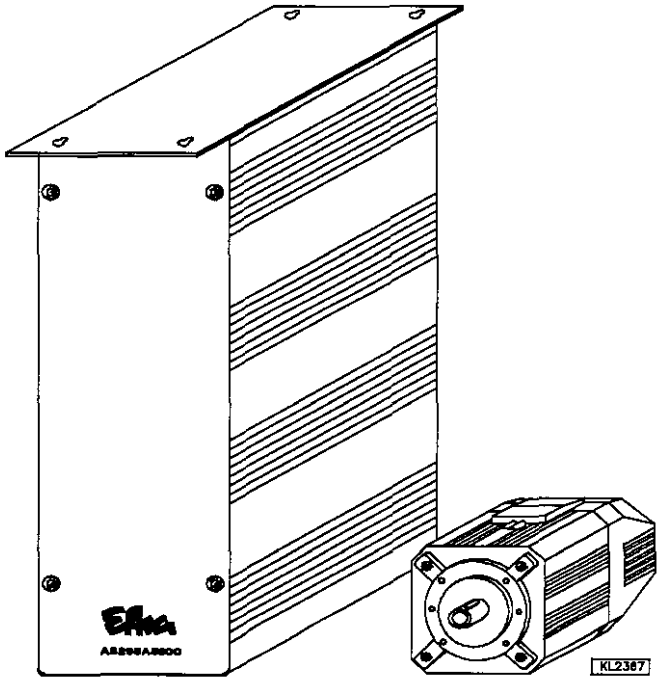

INSTRUCTION MANUAL

No. 402270 English

Efka
FRANKL & KIRCHNER
GMBH & CO KG

Efka
EFKA OF AMERICA INC.

Efka
EFKA ELECTRONIC MOTORS
SINGAPORE PTE. LTD.

Contents **Page**

1. Important Safety Instructions

When using an EFKA drive and accompanying devices (e.g. for sewing machines), basic safety precautions should always be followed, including the following:

- Read all instructions thoroughly before using this drive.
- Drive, its accessories and accompanying devices should be mounted and put into operation by qualified personnel in accordance with the guidelines provided in the instruction manual.

To reduce the risk of burns, fire, electric shock, or personal injury:

- Use this drive only for its intended use as described in the instruction manual.
- Use only attachments recommended by the manufacturer or as contained in the instruction manual.
- Do not operate without corresponding protective devices.
- Never operate this drive if one or more parts (e.g. cables, plugs) are damaged, if it is not working properly, if any damages can be identified or are to be suspected (e.g. after it has been dropped). Only qualified personnel are authorized to make adjustments, eliminate faults and complete repair work.
- Never operate the drive with the air openings blocked. Keep ventilation openings of the drive free from the accumulation of lint, dust and loose cloth.
- Never drop or insert any object into any opening.
- Do not use drive outdoors.
- Do not operate where aerosol (spray) products are being used or where oxygen is being administered.
- To disconnect, turn off main switch, then remove plug from outlet.
- Do not unplug by pulling on cord. To unplug, grasp the plug, not the cord.
- Keep fingers away from all moving machine parts. Special care is required e.g. around the sewing machine needle and the V-belt.
- Before mounting and adjusting accompanying devices, i.e. position transmitter, reversing device, light barrier, etc., disconnect drive from mains (turn off main switch, remove mains plug from outlet [DIN VDE 0113 part 301; EN 60204-3-1; IEC 204-3-1]).
- Always switch off (0) machine and remove plug from outlet, when removing covers, mounting accompanying devices, position transmitter especially, light barrier, etc., or any other devices mentioned in the instruction manual.
- Only qualified personnel are authorized to work on the electrical components.
- Work on high voltage circuit areas is forbidden, except as stated in the respective regulations, e.g. DIN VDE 0105 part 1.
- Only specially trained personnel are authorized to complete repair work.
- Cables to be wired must be protected against expectable strain and fastened adequately.
- Cables near moving machine parts (e.g. V-belts) must be wired at a minimum distance of 25 mm (see DIN VDE 0113 part 301; EN 60204-3-1; IEC 204-3-1).
- For safety it is preferred to wire the cables separately from each other.
- Before connecting the mains line make sure that the mains voltage corresponds to the specifications on the motor rating plate and on the nameplate of the power pack.
- Connect this drive to a properly grounded outlet only. See Grounding Instructions.
- Electric accompanying devices and accessories must only be connected to safety low voltage.
- EFKA DC drives are protected according to overvoltage class 2 (DIN VDE 0160 § 5.3.1).
- Observe all safety guidelines before undertaking conversions or modifications.
- For repair and maintenance use only original replacement parts.

Warnings in the instruction manual which point out particular risks of personal injury or risk to the machine are marked with this symbol wherever applicable.

This symbol is a warning on the control and in the instruction manual. It indicates hazardous voltage.

CAUTION - In the case of failure this area can be current-carrying even after having turned the power off (non discharged capacitors).

- The drive is not an independently operating unit, but is designed to be incorporated into other machinery. It must not be put into service until the machinery into which it is to be incorporated has been declared in conformity with the provisions of the EC Directive.

Save these instructions for future reference.

2. Range of Applications

The drive is suitable for sewing machines:

Brand	
Various brands	Industrial sewing machines Sewing automats

2.1 Use in Accordance with Regulations

The drive is not an independently operating machine, but is designed to be incorporated into other machinery. It must not be put into service until the machinery into which it is to be incorporated has been declared in conformity with the provisions of the EC Directive (Appendix II, paragraph B of the Directive 89/392//392/EEC and supplement 91/368/EEC).

The drive has been developed and manufactured in accordance with the respective EC standards:

EN 60204-3-1: 1990 Electrical equipment of industrial machines:
Particular requirements for industrial sewing machines,
sewing units and sewing systems.

The drive can only be operated:

- on thread processing machines
- in dry areas

3. Complete Drive Unit Consisting of

1	Direct current motor	DC1500
1	Electronic control	vario dc AB295A5600
	- Power pack	N202
1	Set of standard accessories consisting of:	B156 documentation

3.1 Special Accessories

External actuator type EB301A with approx. 250 mm connecting cable and 9-pole SubminD plug	- part no. 4170023
Potential equalization cord 700 mm long, LIY 2.5 mm², grey, with forked cable brackets on both sides	- part no. 1100313
Extension cable for motor connection, approx. 400 mm long	- part no. 1111858
Extension cable for motor connection, approx. 1500 mm long	- part no. 1111857
Sewing light transformer	- please indicate line voltage and sewing light voltage (6.3V or 12V)
9-pole SubminD male connector	- part no. 0504135
9-pole SubminD female connector	- part no. 0504136
Semimonocoque casing for 9 pole SubminD	- part no. 0101523
37-pole SubminD connector	- part no. 0504280
Semimonocoque casing for 37 pole SubminD	- part no. 0101533

4. Differences from Control AB285A5500

- **Provides all functions of control AB285A5500**
- **Additional 13 outputs, 10 digital and 2 analog inputs on a separate connector (ST2)**
- **Selection of inputs and outputs by means of parameters group 2 (see Parameter List page 14)**

5. Starting Service

Before putting the control into operation, the following must be ensured, checked and/or adjusted:

- **The correct installation of the drive, the position transmitter and accompanying devices, if necessary**
- **The correct adjustment of the direction of rotation of the motor**

6. Socket Connectors

The drive receives the commands necessary for its operation from a master computer. A socket with an RS485 interface and further signal lines is provided for that. Moreover, the control has sockets for the connection of the motor, position transmitter and external actuator.

B2 Connection for position transmitter in the motor

B18 Connector for 180° sensor connection or synchronization impulse for external generation of positions

B41 Connector for motor power supply

B80 Actuator

B485 RS485 interface and further signal lines

ST2 Connection for inputs and outputs of the solenoids / solenoid valves / pushbuttons and switches

S1 Jumper for terminating resistor (not visible in figure)
See chapter "Activate/Deactivate Terminating Resistor")

Factory setting: Jumper S1 closed!

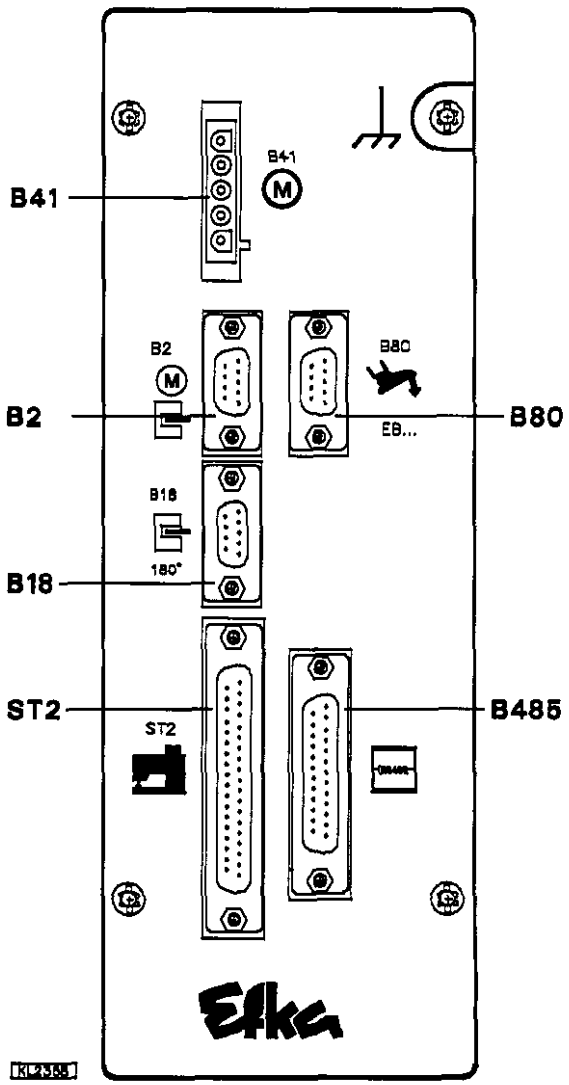

7. Connection Diagram

7.1 Connector Setting for RS485 BUS

For examples of connections see chapter 16 !

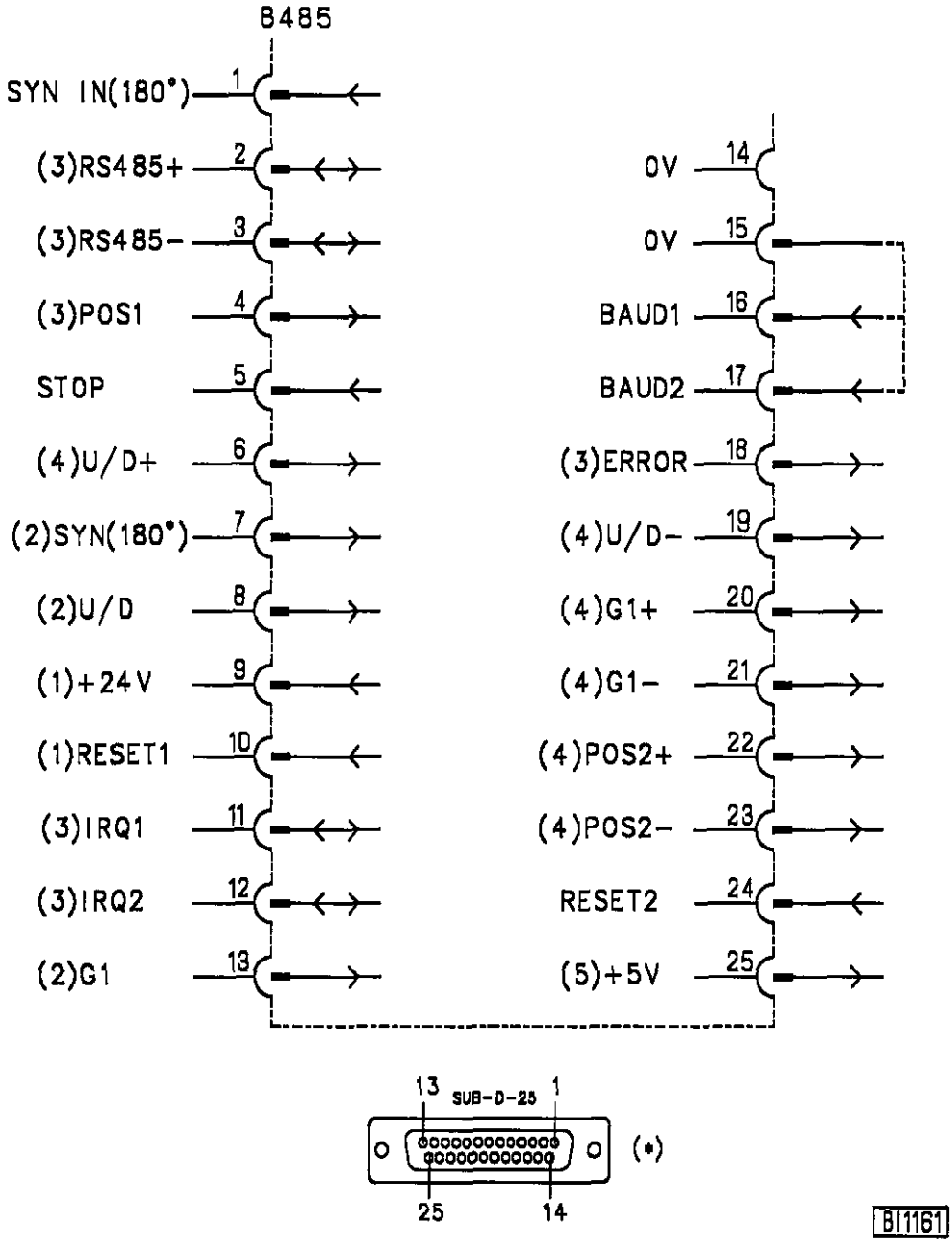

Symbols: --> = Output <-- = Input <--> = bidirectional

Note:
Connecting cable between computer and control AB295A must be shielded.

1) RESET 1 in connection with external nominal voltage = 24V, no-load voltage I_{max} = 36V
2) Output +5V, I_{max} 15mA
3) TRI-STATE line (several slaves can be connected)
4) Differential driver outputs
5) Voltage +5V, I_{max} = 50 mA

SYN IN(180°)	- External synchronization signal (3)
POS1	- Counting signal position 1
POS2+ / POS2-	- Differential outputs position 2
STOP	- Input for the stop of the drive
SYN	- Synchronization window (180° track)
U/D	- Direction of rotation of the position transmitter (counterclockwise = low / clockwise = high)
U/D+ / U/D-	- Differential outputs of the direction of rotation of the position transmitter
RESET 1	- Reset 1 (low active with U = < 11V)
RESET 2	- Reset 2 (low active with U = <1,5V)
IRQ1	- Interrupt 1 (low active)
IRQ2	- Interrupt 2 (low active)
G1	- 512 impulses/rotation
G1+ / G1-	- Differential outputs 512 impulses/rotation
BAUD1	- Input 1 to set baud rates (low active)
BAUD2	- Input 2 to set baud rates (low active)
FEHLER	- Error output

7.2 Connector Setting for Actuator

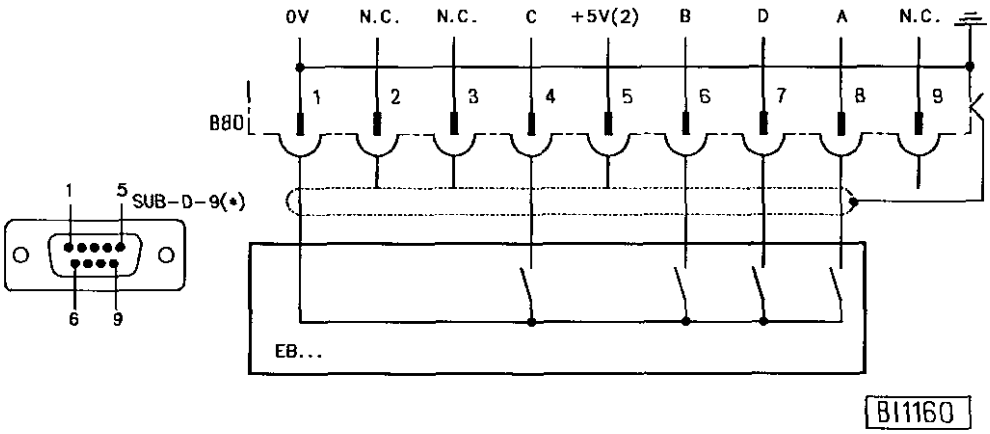

EB... - Actuator

2) Voltage +5V, I_{max} = 50mA
3) Select either B485/1 or B18/7

7.3 Connnector Setting for Switches and Solenoids

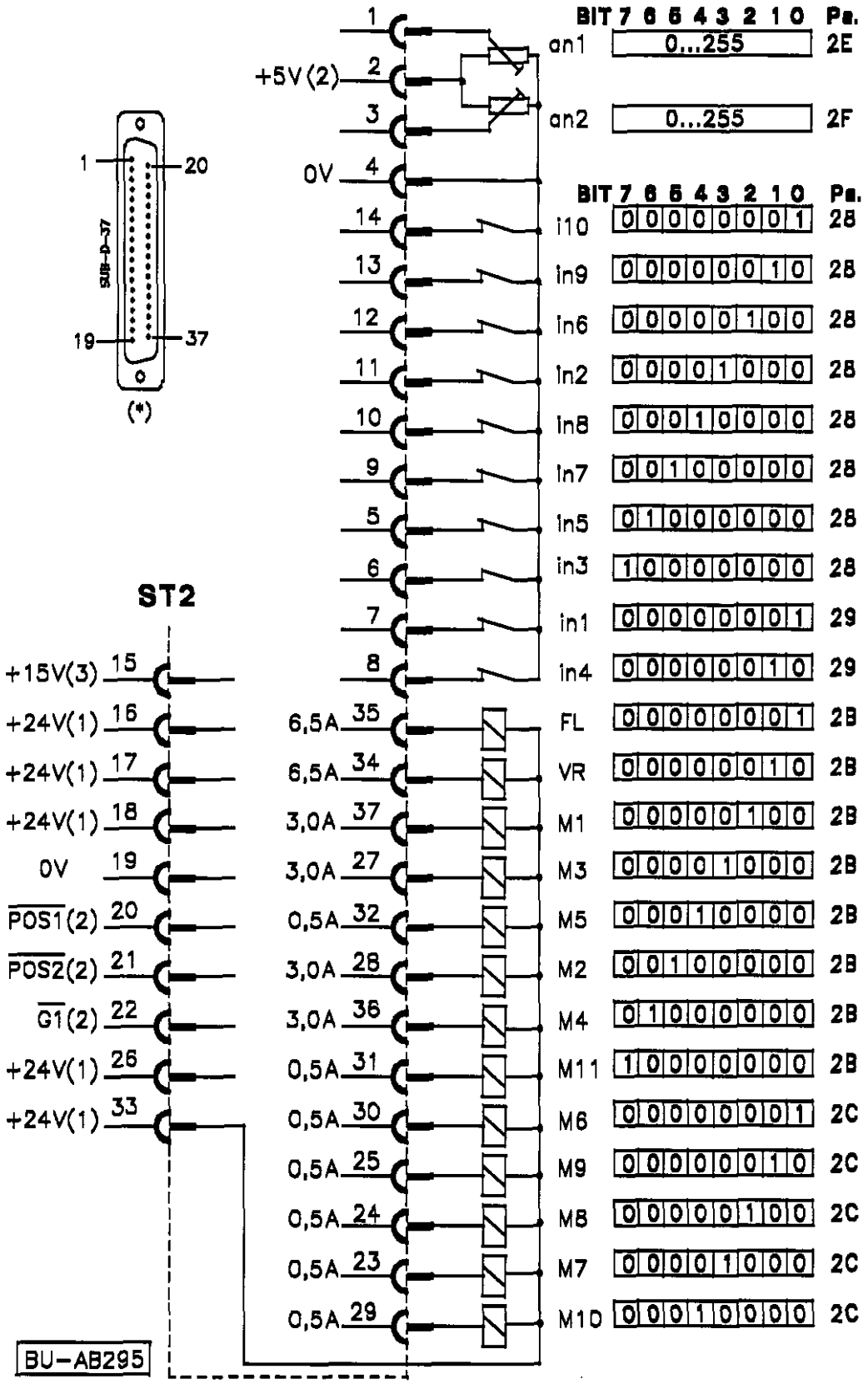

1) Nominal voltage 24V, no-load voltage max. 30V momentarily after power On
2) Transistor output with open collector (max. 40V, 10mA)
3) Nominal voltage 15V, I_{max} = 30mA
4) Nominal voltage 5V, I_{max} = 50mA
*) Front view of the socket (component side) and/or rear view (soldering side) of the plug

Explanation of abbreviations female connector ST2!

Inputs:

an1 - Analog input 1 (approx. 10kΩ)
an2 - Analog input 2 (approx. 10kΩ)
in1 - Input 1
in2 - Input 2
in3 - Input 3
in4 - Input 4
in5 - Input 5
in6 - Input 6
in7 - Input 7
in8 - Input 8
in9 - Input 9
i10 - Input 10

Outputs:

M1 - Output 1
M2 - Output 2
M3 - Output 3
M4 - Output 4
M5 - Output 5
M6 - Output 6
M7 - Output 7
M8 - Output 8
M9 - Output 9
M10 - Output 10
M11 - Output 11
VR - Output backtack
FL - Output foot lift
POS1 - Output for position 1 (inverted)
POS2 - Output for position 2 (inverted)
G1 - Generator impulses (inverted)

Attention!
When connecting the outputs, ensure that a total power of 96VA constant load will not be exceeded !

7.3.1 Programming the Inputs

Inputs in1...i10 may be queried by using several status words. For queries see tables below.

7.3.1.1 Inputs Switched to 0 Volt

"1" appears when the input is switched to **0 Volt**!

Pa. 27																
15	14	13	12	11	10	9	8	7	6	5	4	3	2	1	0	BIT
Pa. 29								Pa. 28								
7	6	5	4	3	2	1	0	7	6	5	4	3	2	1	0	BIT
0	0	0	0	0	0	0	0	0	0	0	0	0	0	0	1	in 10
0	0	0	0	0	0	0	0	0	0	0	0	0	0	1	0	in 9
0	0	0	0	0	0	0	0	0	0	0	0	0	1	0	0	in 6
0	0	0	0	0	0	0	0	0	0	0	0	1	0	0	0	in 2
0	0	0	0	0	0	0	0	0	0	0	1	0	0	0	0	in 8
0	0	0	0	0	0	0	0	0	0	1	0	0	0	0	0	in 7
0	0	0	0	0	0	0	0	0	1	0	0	0	0	0	0	in 5
0	0	0	0	0	0	0	0	1	0	0	0	0	0	0	0	in 3
0	0	0	0	0	0	0	1	0	0	0	0	0	0	0	0	in 1
0	0	0	0	0	0	1	0	0	0	0	0	0	0	0	0	in 4

0271-B13

If the system permits 8-bit words, parameter 28 and 29 are to be programmed in succession. If the system permits 16-bit words, parameter 27 is to be programmed.

7.3.1.2 Inputs Switched to +5 and/or +24 Volt

"1" appears when the input is switched to +5V/+24V!

Pa. 24																
15	14	13	12	11	10	9	8	7	6	5	4	3	2	1	0	BIT
Pa. 26								Pa. 25								
7	6	5	4	3	2	1	0	7	6	5	4	3	2	1	0	BIT
0	0	0	0	0	0	0	0	0	0	0	0	0	0	0	1	in 10
0	0	0	0	0	0	0	0	0	0	0	0	0	0	1	0	in 9
0	0	0	0	0	0	0	0	0	0	0	0	0	1	0	0	in 6
0	0	0	0	0	0	0	0	0	0	0	0	1	0	0	0	in 2
0	0	0	0	0	0	0	0	0	0	0	1	0	0	0	0	in 8
0	0	0	0	0	0	0	0	0	0	1	0	0	0	0	0	in 7
0	0	0	0	0	0	0	0	0	1	0	0	0	0	0	0	in 5
0	0	0	0	0	0	0	0	1	0	0	0	0	0	0	0	in 3
0	0	0	0	0	0	0	1	0	0	0	0	0	0	0	0	in 1
0	0	0	0	0	0	1	0	0	0	0	0	0	0	0	0	in 4

0271–B14

If the system permits 8-bit words, parameter 25 and 26 are to be programmed in succession. If the system permits 16-bit words, parameter 24 is to be programmed.

7.3.2 Programming the Outputs

If the outputs are to be set with the control word 2A (Integer 16 bit, 4 Char-Hex data), bit 15 and bit 14 must be set according to the table below. Bit 13 must always be set at "0". If the outputs are set with the control words 2B and 2C, control word 2B must be transmitted before 2C, with mode bits 7, 6 and bit 5 = 0.
After having received control word 2C, the ouputs will be set according to the data of control words 2B, 2C and the control bits. The mere transmission of control word 2B does not cause an alteration of the outputs.

Pa. 2A																
15	14	13	12	11	10	9	8	7	6	5	4	3	2	1	0	BIT
Pa. 2C								Pa. 2B								
7	6	5	4	3	2	1	0	7	6	5	4	3	2	1	0	BIT
		0	0	0	0	0	0	0	0	0	0	0	0	0	1	FL
		0	0	0	0	0	0	0	0	0	0	0	0	1	0	VR
		0	0	0	0	0	0	0	0	0	0	0	1	0	0	M1
		0	0	0	0	0	0	0	0	0	0	1	0	0	0	M3
		0	0	0	0	0	0	0	0	0	1	0	0	0	0	M5
		0	0	0	0	0	0	0	0	1	0	0	0	0	0	M2
		0	0	0	0	0	0	0	1	0	0	0	0	0	0	M4
		0	0	0	0	0	0	1	0	0	0	0	0	0	0	M11
		0	0	0	0	0	1	0	0	0	0	0	0	0	0	M6
		0	0	0	0	1	0	0	0	0	0	0	0	0	0	M9
		0	0	0	1	0	0	0	0	0	0	0	0	0	0	M8
		0	0	1	0	0	0	0	0	0	0	0	0	0	0	M7
		0	1	0	0	0	0	0	0	0	0	0	0	0	0	M10
0	0	SET 0 / 1														
0	1	SET OR														
1	0	CLEAR														
1	1	NO CHANGE														

0271–015

<u>Control word 2C</u>

Example 1: $2C = 06_{hex} = 00000110$

Outputs M8 and M9 are switched on. All other outputs (M6, M7, M10) are switched off.

Example 2: $2C = 46_{hex} = 0\underline{1}000110$

Outputs M8 and M9 are switched on. All other outputs (M6, M7, M10) remain unchanged.

Example 3: $2C = 86_{hex} = \underline{1}0000110$

Outputs M8 and M9 are switched off. All other outputs (M6, M7, M10) remain unchanged. If for ex. output M7 had been set before, this setting is maintained.

Example 4: $2C = C6_{hex} = \underline{11}000110$

All outputs M6, M7, M8, M9 and M10 remain unchanged.

7.4 Connector Setting for 180° Sensor Connection

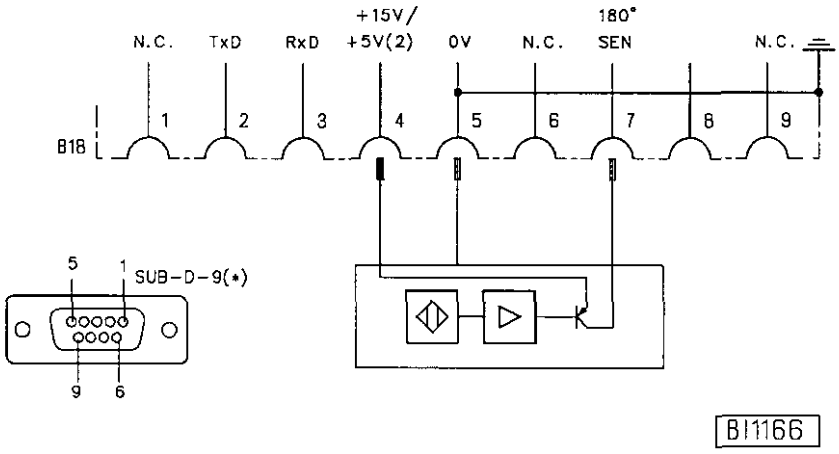

180° SEN - External signal; select either B18/7 or B485/1!

For external devices there is a supply voltage of +5V on socket B18/4. After opening the cover, this voltage can be changed to +15V by moving a multipole connector J4 on the printed circuit board to a different position.

Attention!
Before opening the cover, turn power off and remove mains plug from outlet!

+15V = Connect righthand pins 1 and 2 with jumper
+5V = Connect lefthand pins 3 and 4 with jumper (factory setting)

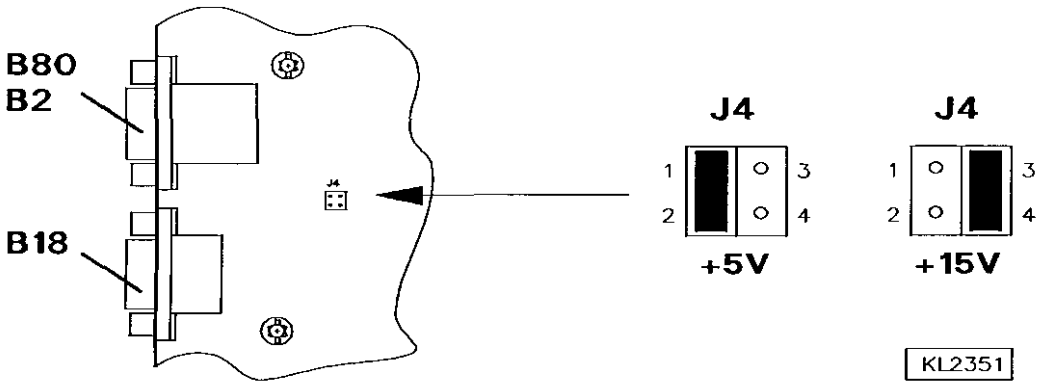

2) Nominal voltage +5V, 100mA (can be changed to +15V, 100mA)

8. Interface Definition

Note:
In the BUS system with an EFKA interface motor other modules (e.g. I/O) must have a smaller address than $7F.

Note:
In the control a BUS termination resistor of 100 Ohm is provided. Therefore the control must be the last module to be connected to the RS485 BUS. If several controls are connected see chspter "Examples of Connections".

8.1 Baud Rate Selection

Baud rate	Jumper in plug B3
125,000 Baud	All pins open
41,667 Baud	Connect pin 16 with pin 15 (0V)
31,250 Baud	Connect pin 17 with pin 15 (0V)
9,600 Baud	Connect pin 16 and 17 with pin 15 (0V)

8.2 Protocol

- Data transfer according to ISO 1745
- Only the commands **data link establishment** and **information transfer** are permitted.
- The control is selected with **address $F0** (preset value). If several controls are connected further addresses up to $FF are permitted.
- Data transfer in **ASCII** (see also chapter **ASCII Data Transfer)**
- One word = 10 bit (1 start bit, 8 data bits, 1 stop bit, no parity bit)

8.3 Send Timeout before "NAK"

After detecting an error the "NAK" acknowledgment will only be sent after a "timeout". See the following table for the length of the "timeout" depending on the baud rate.

125.000 Baud	2 ms	Timeout
41.667 Baud	3 ms	Timeout
31.250 Baud	4 ms	Timeout
9.600 Baud	10 ms	Timeout

8.4 Byte to Byte Timeout

If, in a telegram, a "timeout" is exceeded from one word to the next, "NAK" will be sent. Simultaneously, bit 6 is set in the communication register (parameter 00). See the following table for the length of the "timeout" depending on the baud rate.

125.000 Baud	6 ms	Timeout
41.667 Baud	8 ms	Timeout
31.250 Baud	10 ms	Timeout
9.600 Baud	22 ms	Timeout

8.5 Communication Monitoring (System Values D, Group E)

A "timeout" for communication monitoring can be set by parameter E3. This "timeout" can be set at 10-millisecond steps within a range of 0 and 255 (max. 2.5 seconds). If, in this parameter, a value not equal to zero is inputted, there must always be an information transfer to or a data link establishment with the slave within the preset time. If the "timeout" is exceeded, the drive stops in position 2 and sets bit 6 in the communication register (parameter 00). The "timeout" starts with the next telegram **after** the data link establishment for parameter E3. It is possible to deactivate the monitoring by inputting the value zero in parameter E3 (preset value). Please note that the new value becomes effective only with the next telegram.

8.6 Control Characters

SOH	**$01**	start of header
ADR	**$F0**	address (can be set)
STX	**$02**	start of text
ETX	**$03**	end of text
ACK	**$06**	acknowledge
NAK	**$15**	not acknowledge
ENQ	**$05**	enquiry
BCC		block check EXOR-linkage of **ADR to ETX**

8.7 Special Characters

=	**$3D**	equals / value assignment
,	**$2C**	information separator in list recall
.	**$2E**	information separator

8.8 Data Link Establishment

Overriding control = Master, AB85A = Slave

Master transmits	-	**SOH**	**ADR**	**STX**	Text	**ETX**	**BCC**
Slave transmits	-	**ADR**	**ACK**		If telegram o.k.		
	-	**ADR**	**NAK**		In case of error		

Parameters in the control are modified by the data link establishment. The **Text** contains the modification information.
The general form of a modification is: **Parameter = Value**
The parameter number and the corrsponding range are described in chapter **Parameters**.

8.9 Information Transfer

Master transmits	-	**SOH**	**ADR**	**STX**	Text	**ENQ**	
Slave transmits	-	**SOH**	**ADR**	**STX**	Text	**ETX**	**BCC**
		ADR	**NAK**		In case of error		

The Master receives information on the control status by the information transfer. This information is sent in the form of status bytes. Only the parameter number is transmitted by the information transfer. More information on the status bytes are described in chapter **Parameters**.

8.10 Text

The Text contains all data for the modification of settings in the control AB295A, or to recall operational statuses. These settings and operational statuses are described in detail in chapter **Parameters.**

8.11 Stop Input

0 = Run / 1 = Stop

The start of the drive can be suppressed, or the running motor can be stopped immediately by the "stop" signal. The drive can only be restarted after a reset (hardware or software). The stop signal must be on for at least 10 ms.

8.12 Error Output

0 = ready for operation / 1 = error

The "error" signal is emitted whenever one of the following items applies:

- Hardware error
- Software error
- Position transmitter not connected or defective
- Commutation transmitter cord or frequency converter disturbed
- Line voltage too low
- Blocking, motor overstrained

The error signal can be reset (hardware or software).

9. Parameters

The parameters are divided into the following groups:

Group 0 : **Status and Control Register**
Contain information on the actual control status

Group 2 : **Inputs and Outputs on Socket ST2**
13 outputs can be set and 10 digital and/or 2 analog inputs can be queried.

Group 1-4 : **Control Values**
The control values correspond to the system values after power on. They can be modified online during the functional sequence.

Group 5 - 7 : **System Values**
The system values serve as basic settings which are rarely modified. These values can be programmed once and are saved after power off.
Attention: The system values cannot be modified during sewing.

Group E : **Operational statuses**
The actual operational statuses can be read out here, e.g. actual count of the counter or actual speed.

Group F : **Ratings**
Contain information on the control, e.g. software status and module address.

Group 0	
Parameter 00 - Communication Byte	
Bit 0 = 1	In response to an information transfer a list of parameter settings is transmitted (see chapter **ASCII Data Transfer**)
Bit 1 = 0	Reserved (must always be 0)
Bit 2 = 1	Overflow in case of data link establishment (parameter value above or below setting range)
Bit 3 = 1	Access not permitted
Bit 4 = 1	Noise error during transmission
Bit 5 = x	Reserved
Bit 6 = 1	Time-out error during transmission
Bit 7 = 1	Block check error (BCC) during transmission

Bit 0 and 1 can be overwritten and read. All others can only be read.

Parameter 01 - Error Byte	
Bit 0 = 1	Hardware error
Bit 1 = 1	Software error
Bit 2 = 1	Position transmitter not connected or defective
Bit 3 = 1	Commutation transmitter cord or frequency converter disturbed
Bit 4 = 1	Line voltage too low
Bit 5 = 1	Blocking, motor overstrained
Bit 6 = 1	Parameter does not exist
Bit 7 = 1	Transfer is temporarily interrupted

Parameter 02 - Status Byte 1	
Bit 0 = 1	Motor at standstill
Bit 1 = 1	Speed has been reached
Bit 2 = 1	Position has been reached
Bit 3 = 1	Is in position 2
Bit 4 = 1	Is in position 1
Bit 5 = 1	Drive is ready (after RESET)
Bit 6 = 1	Reference point is reached
Bit 7 = 1	Position transmitter synchronized

Parameter 03 - Status Byte 2	
Bit 0 = 1	Position 1E has been reached (E = leading)
Bit 1 = 1	Position 1A has been reached (A = trailing)
Bit 2 = 1	Position 2E has been reached
Bit 3 = 1	Position 2A has been reached
Bit 4 = 1	Position 3E has been reached
Bit 5 = 1	Position 3A has been reached
Bit 6 = 1	180 ° window has been reached
Bit 7 = 1	Reserved

Parameter 04	**- Control Byte 1**	
Bit 0	**= 1**	Triggers a software reset
Bit 1	**= 1**	Direction of rotation cw
Bit 3/2	**= 00**	Speed 1 (parameter 10)
	= 01	Speed 2 (parameter 11)
	= 10	Speed 30 (parameter 63)
	= 11	Speed 40 (parameter 64)
Bit 6 - 4	**= 000**	Motor is supposed to run
	= 001	Fast stop (unpositioned)
	= 010	Stop in position 1
	= 011	Stop in position 2
	= 100	Stop in position 3
	= 111	Release the pedal
Bit 7	**= 1**	Go to reference point

Parameter 05	**- Control Byte 2**	
Bit 0	**= 1**	Single impulse of position 2
Bit 1	**= 1**	Double speed (**attention:** speed has been increased in steps of 4 RPM. This does not apply to the positioning speed)
Bit 2	**= 1**	Disengage accurate positioning
Bit 3-4	**= 00**	Stop with pedal in position 0 -> unpositioned (preset)
	= 01	Stop with pedal in position 0 -> position 1
	= 10	Stop with pedal in position 0 -> position 2
	= 11	Stop with pedal in position 0 -> position 3
Bit 5		Limit speed to the value set in parameter 64 (speed 40)
Bit 6-7		Reserved

Parameter 08	**- Status Byte 3**	
Bit 0	**= 1**	Pedal contact A closed
Bit 1	**= 1**	Pedal contact B closed
Bit 2	**= 1**	Pedal contact C closed
Bit 3	**= 1**	Pedal contact D closed
Bit 4	**= 1**	Pedal in position -2
Bit 5	**= 1**	Pedal in position -1
Bit 6	**= 1**	Pedal in off-position
Bit 7	**= 1**	Pedal pushed forward

Parameter 0A	**- System Byte 1**	
Bit 0	**= 0**	External synchronization via B18/7
Bit 0	**= 1**	External synchronization via B485/1
Bit 1-7		Reserved

Parameter 0F - Interrupt Control Byte			
Bit 0	= 1	Receive interrupt line 1 (IRQ1)	
Bit 1	= 1	Transmit interrupt line 1	
Bit 2	= 1	Receive interrupt line 2 (IRQ2)	
Bit 3	= 1	Transmit interrupt line 2	
Bit 5/4	= 00	IRQ1 Delay with counter 1	(parameter 4C)
	= 01	IRQ1 Delay with counter 1, then with timer 1	(parameter 4D)
	= 10	IRQ1 Delay with timer 1, then with counter 1	
	= 11	IRQ1 Delay with timer 1	
Bit 7/6	= 00	IRQ2 Delay with counter 2	(parameter 4E)
	= 01	IRQ2 Delay with counter 2, then with timer 2	(parameter 4F)
	= 10	IRQ2 Delay with timer 2, then with counter 2	
	= 11	IRQ2 Delay with timer 2	

The function of the interrupt control is described in chapter **Interrupt Control**.

Group 1 Control Values A	
Parameter 10 - Speed 01	Speed 1 at [2 RPM] (with control byte 2 bit 1 = 1, then [4 RPM])
Parameter 11 - Speed 02	Speed 2 at [2 RPM] (with control byte 2 bit 1 = 1, then [4 RPM])
Parameter 12 - Positioning speed	Positioning speed at [2 RPM]
Parameter 17 - Braking power	Braking power at standstill (value changeable from 0 to 30.) After RESET parameter 57 will be read as preset value
Parameter 18 - Ramp 1	Accelerating ramp [1/min x ms]
Parameter 19 - Ramp 2	Slowing down to intermediate speed [1/min x ms]
Parameter 1A - Ramp 3	Slowing down for positioning [1/min x ms]
Parameter 1B - Ramp 4	Positioning intensity

Group 2 Inputs on Socket ST2				
Parameter 2E **Parameter 2F**				an1 = Analog input (socket ST2/1) 0...255 corresponds to 0...5V an2 = Analog input (socket ST2/3) 0...255 corresponds to 0...5V
Pa.	**Bit**	**Pa.**	**Bit**	**"1" at the input if switched to 0 Volt**
27	0 = 1	28	0 = 1	i10 = Input 10 (socket ST2/14) active
27	1 = 1	28	1 = 1	in9 = Input 9 (socket ST2/13) active
27	2 = 1	28	2 = 1	in6 = Input 6 (socket ST2/12) active
27	3 = 1	28	3 = 1	in2 = Input 2 (socket ST2/11) active
27	4 = 1	28	4 = 1	in8 = Input 8 (socket ST2/10) active
27	5 = 1	28	5 = 1	in7 = Input 7 (socket ST2/9) active
27	6 = 1	28	6 = 1	in5 = Input 5 (socket ST2/5) active
27	7 = 1	28	7 = 1	in3 = Input 3 (socket ST2/6) active
27	8 = 1	29	0 = 1	in1 = Input 1 (socket ST2/7) active
27	9 = 1	29	1 = 1	in4 = Input 4 (socket ST2/8) active
Pa.	**Bit**	**Pa.**	**Bit**	**"1" at the input if switched to +5/+24 Volt**
24	0 = 1	25	0 = 1	i10 = Input 10 (socket ST2/14) active
24	1 = 1	25	1 = 1	in9 = Input 9 (socket ST2/13) active
24	2 = 1	25	2 = 1	in6 = Input 6 (socket ST2/12) active
24	3 = 1	25	3 = 1	in2 = Input 2 (socket ST2/11) active
24	4 = 1	25	4 = 1	in8 = Input 8 (socket ST2/10) active
24	5 = 1	25	5 = 1	in7 = Input 7 (socket ST2/9) active
24	6 = 1	25	6 = 1	in5 = Input 5 (socket ST2/5) active
24	7 = 1	25	7 = 1	in3 = Input 3 (socket ST2/6) active
24	8 = 1	26	0 = 1	in1 = Input 1 (socket ST2/7) active
24	9 = 1	26	1 = 1	in4 = Input 4 (socket ST2/8) active

Group 2	Outputs on Socket ST2			
Pa.	**Bit**	**Pa.**	**Bit**	
2A	0 = 1	2B	0 = 1	FL = Output FL (socket ST2/35) active
2A	1 = 1	2B	1 = 1	VR = Output VR (socket ST2/34) active
2A	2 = 1	2B	2 = 1	M1 = Output 1 (socket ST2/37) active
2A	3 = 1	2B	3 = 1	M3 = Output 3 (socket ST2/27) active
2A	4 = 1	2B	4 = 1	M5 = Output 5 (socket ST2/32) active
2A	5 = 1	2B	5 = 1	M2 = Output 2 (socket ST2/28) active
2A	6 = 1	2B	6 = 1	M4 = Output 4 (socket ST2/36) active
2A	7 = 1	2B	7 = 1	M11 = Output 11 (socket ST2/31) active
2A	8 = 1	2C	0 = 1	M6 = Output 6 (socket ST2/30) active
2A	9 = 1	2C	1 = 1	M9 = Output 9 (socket ST2/25) active
2A	10 = 1	2C	2 = 1	M8 = Output 8 (socket ST2/24) active
2A	11 = 1	2C	3 = 1	M7 = Output 7 (socket ST2/23) active
2A	12 = 1	2C	4 = 1	M10 = Output 10 (socket ST2/29) active
2A	13 = 0	2C	5 = 0	Bit 13 and/or 5 must always be programmed at "0"
2A	14 = x	2C	6 = x	Control bit (see table in chapter "Connection Diagram")
2A	15 = x	2C	7 = x	Control bit

If the system permits 8-bit words, parameter 28 and 29 are to be programmed in succession. If the system permits 16-bit words, parameter 27 is to be programmed.

Group 4	Control Values D
Parameter 4C - Stitch counter IRQ1	Stitch delay for transmitting or receiving of interrupt line 1
Parameter 4D - Timer IRQ1	Time delay for transmitting or receiving of interrupt line 1
Parameter 4E - Stitch counter IRQ2	Stitch delay for transmitting or receiving of interrupt line 2
Parameter 4E - Timer IRQ1	Time delay for transmitting or receiving of interrupt line 2

Group 5	System Values A	
Parameter 50	**- Position1E**	Position 1 leading edge
Parameter 51	**- Position1A**	Position 1 trailing edge
Parameter 52	**- Position2E**	Position 2 leading edge
Parameter 53	**- Position2A**	Position 2 trailing edge
Parameter 54	**- Position3E**	Position 3 leading edge
Parameter 55	**- Position3A**	Position 3 trailing edge
Parameter 56	**- Position**	Selection of synchronization source for generating the positions 0 = Internal synchronization signal 1 = External signal (active low) 2 = External signal (active high)
Parameter 57	**- Braking power**	Preset value for braking power at standstill (preset value = 0; i.e. braking at standstill is not effective)
Parameter 58	**- Ramp 1**	Accelerating ramp Is transferred to ramp 1 in case of reset (parameter 18)
Parameter 59	**- Ramp 2**	Slowing down to intermediate speed Is transferred to ramp 2 in case of reset (parameter 19)
Parameter 5A	**- Ramp 3**	Slowing down for positioning Is transferred to ramp 3 in case of reset (parameter 1A)
Parameter 5C	**- Ramp 4**	Positioning intensity Is transferred to ramp 4 in case of reset (parameter 1B)

Group 6 System Values B	
Parameter 60 - Direction of rotation	Direction of rotation of the motor cw = 0, ccw = 1 Contents is transferred to the control byte in case of reset
Parameter 61 - Speed 10	Speed 10 at [2 RPM] (with control byte 2 bit 1 = 1, then [4 RPM] Is transferred to speed 1 in case of reset (parameter 10)
Parameter 62 - Speed 20	Speed 20 at [2 RPM] (with control byte 2 bit 1 = 1, then [4 RPM] Is transferred to speed 2 in case of reset (parameter 11)
Parameter 63 - Speed 30	Speed 30 at [2 RPM] (with control byte 2 bit 1 = 1, then [4 RPM]
Parameter 64 - Speed 40	Speed 40 at [2 RPM] (with control byte 2 bit 1 = 1, then [4 RPM]
Parameter 65 - Maximum speed	The speed is internally limited to this value
Parameter 66 - Positioning speed	Positioning speed at [2 RPM] Is transferred to positioning speed in case of reset (parameter 12)

Group 7 System Values C	
Parameter 70 - P-divisor	Dividing factor P-controller for adapting the running behavior to the machine
Parameter 71 - I-divisor	Dividing factor P-controller for adapting the running behavior to the machine
Parameter 72 - Stop segment	Number of increments before stop position

Group E System Value D	
Parameter E0 - Actual count of counter	The actual count of the counter of the position transmitter can be read out. After a reset synchronization is necessary. Use command "go to reference point". Without synchronization a false value will be emitted.
Parameter E1 - Actual speed	The actual speed can be read out. It is emitted at 2/min. The value must thus be multiplied by 2.
Parameter E2 - Run-out stop segment	Number of increments after stop position
Parameter E3 - Communication monitoring	Timeout between the transfers. If the preset time is exceeded, the drive stops in position 2 and set s bit 6 in the communication byte (0 = function disengaged)

Group F Ratings	
Parameter F0 - Entry 1	2 bytes as for ex. serial number can be entered here
Parameter F1 - Entry 2	2 bytes as for ex. work site number can be entered here
Parameter F2 - Working hours	2-byte working hours
Parameter F3 - Entry 3	2 bytes as for ex. repair note can be entered here
Parameter FA - P.c.b. no.	Number of the main p.c.b.
Parameter FB - Control box no.	Control box number
Parameter FC - Efka type	Type number with state of development
Parameter FD - Efka date code	ID code
Parameter FE - Software status	Program number with modification index
Parameter FF - Address	The control address AB295A is filed here (preset = F0)

9.1 Special Features

When setting the speeds (parameters 10, 11, 61, 62, 63 and 64), half the value must be transmitted, i.e. the value "2000" [2 RPM] must be transmitted for a requested speed of 4000 [1 RPM].

9.2 Bit Descriptions

9.2.1 "RDY" Bit 5 in Status Byte 1

The "ready bit" will not be set in case of the following errors:

0 = Error as described below / 1 = Ready for operation

Hardware error
Software error
Position transmitter not connected or defective
Commutation transmitter cord or frequency converter disturbed
Line voltage too low
Blocking, motor overstrained

9.2.2 "NPE" Bit 6 in Status Byte 1

This status bit will be set if the drive is within a window of +/- 8 increments around the reference point after the command "got to reference point". When leaving this range the bit will be erased. The drive goes to the reference point in conjunction with control byte 1 bit 7 and the positioning speed (parameter 12). In order to stop exactly at the reference point the positioning speed should be as low as possible.

9.2.3 "P1E, P1A, P2E, P2A, P3E, P3A" in Status Byte 2

The status bits "PxE" with increasing edge and "PxA" with falling edge will be set for the corresponding position. These bits are preserved until the next change of status of the respective position. Furthermore, the bits can be used to trigger an interrupt (synchronization with position...).

9.2.4 "PSYN" BIT 7 in Status Byte 1

This status bit is set after the position transmitter has been synchronized. Thus the value in parameter E0 as well as all other status signals of the positions are valid.

9.2.5 "P2T" Bit 0 in Control Byte 2

If this bit has been set, a single impulse (LOW-HIGH-LOW) is emitted at the output of position 2. This command will only be executed at standstill. After emission of this impulse or if the drive has not been stopped, the bit will be reset.

9.2.6 "2N" Bit 1 in Control Byte 2

If this bit is set, the speeds are doubled. The quadruple speed must now be transmitted. Internally the speed is limited to 10000 RPM. The positioning speed will not be doubled.

Control Byte 2	bit 1 = 0	=>	double speed
Control Byte 2	bit 1 = 1	=>	quadruple speed

9.2.7 "ZSTP_" Bit 2 in Control Byte 2

If this bit is set, accurate positioning is switched off. The drive stops out of the positioning speed (parameter 68).

9.2.8 "PNLIM" Bit 5 in Control Byte 2

At this setting the speed is limited if the pedal speed is higher. The pedal speed has priority if it is lower than this limit.

9.3 Functional Descriptions

9.3.1 Stop Segment Angle for Positioning (System Values C, Group 7)

By means of parameter 72 an angle can be set with which the stop point can be moved backward depending upon the set stop position. The positions (1E, 1A, 2E, 2A, 3E, 3A) will not be changed.
The preset value for parameter 72 is 0. The maximum value is 50 increments (e. g. 50 x 1.4° = 71.1°) and can be changed in single increments. Transmission is done at 2 bytes.

9.3.2 Run-Out Angle for Positioning (System Values D, Group E)

By means of parameter E2 an angle can be set with which the stop point can be moved forward depending upon the set stop position. The positions (1E, 1A, 2E, 2A, 3E, 3A) will not be changed.
The preset value for parameter E2 is 6. The maximum value is 25 increments and can be changed in single increments (i. e. 25 * 1.4° = 35°). Transmission is done at 2 bytes.

9.3.3 Accurate Positioning

Accurate positioning is time optimal and reproducible. Ensure that the value of ramp 3 (the preset value in parameter 1A corresponds to the value in parameter 5A) is lower than the maximum braking ramp determined by the system (3 to 5 [1/min x ms] lower than the maximum value). In order to determine the maximum braking ramp the value of ramp 3 can be set at the maximum (255). The value for ramp 3 is the quotient of speed and braking time (in ms).

In the example the ramp is the quotient speed change / time.

4500 [1/min] / 150 [ms] = 30 [1/min x ms]

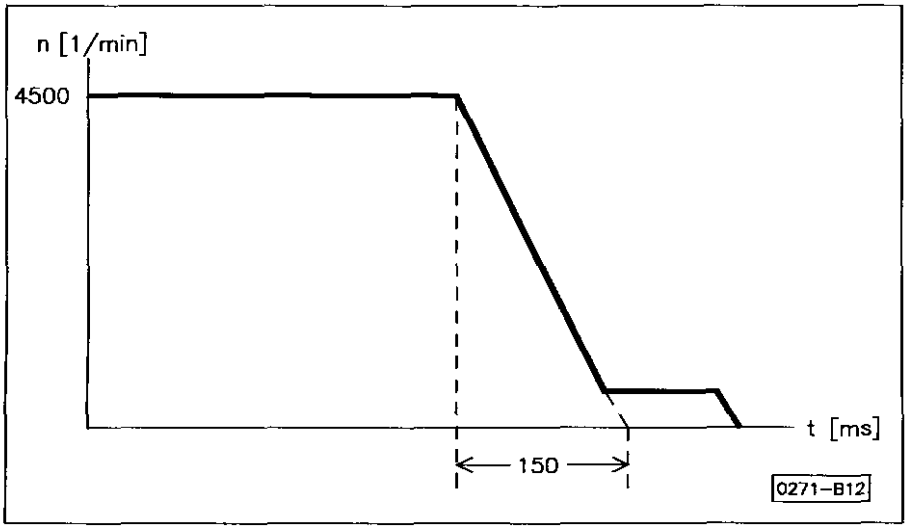

9.4 Outline of Parameters

Values - Ranges - Preset (all specifications in decimal and hexadecimal form = $xxx)

GROUP	NO	DESCRIPTION	MINIMAL HEX	MINIMAL DEZ	MAXIMAL HEX	MAXIMAL DEZ	PRESET HEX	PRESET DEZ	STEP
1	10	Speed 1, [2 U/min]	$023	35	$DAC	3500	Speed. 10		1
1	11	Speed 2, [2 U/min]	$023	35	$DAC	3500	Speed. 20		1
1	12	Positioning speed	$23	35	$FA	250	Parameter 68		1
1	17	Braking power at standstill	$00	0	$32	50	Parameter 57		1
1	18	Ramp 1 [1/min*ms]	$01	1	$37	55	Parameter 58		1
1	19	Ramp 2 [1/min*ms]	$01	1	$37	55	Parameter 59		1
1	1A	Ramp 3 [1/min*ms]	$01	1	$37	55	Parameter 5A		1
1	1B	Ramp 4 [1/min*ms]	$01	1	$37	55	Parameter 5C		1
4	4C	Stitch counter IRQ1	$00	0	$FF	255	$00	0	1
4	4D	Timer IRQ1 [5ms]	$00	0	$FF	255	$00	0	1
4	4E	Stitch counter IRQ2	$00	0	$FF	255	$00	0	1
4	4F	Timer IRQ2 [5ms]	$00	0	$FF	255	$00	0	1
5	50	Position 1E	$00	0	$FF	255	$80	128	1
5	51	Position 1A	$00	0	$FF	255	$8A	138	1
5	52	Position 2E	$00	0	$FF	255	$00	0	1
5	53	Position 2A	$00	0	$FF	255	$0A	10	1
5	54	Position 3E	$00	0	$FF	255	$C0	12	1
5	55	Position 3A	$00	0	$FF	255	$CA	202	1
5	57	Braking power at standstill	$00	0	$32	50	$00	0	1
5	58	Ramp 1 [1/min*ms]	$01	1	$37	55	$1C	28	1
5	59	Ramp 2 [1/min*ms]	$01	1	$37	55	$14	20	1
5	5A	Ramp 3 [1/min*ms]	$01	1	$37	55	$1C	28	1
5	5C	Ramp 4 [1/min*ms]	$01	1	$37	55	$0A	10	1
6	60	Direction of rotation	$00	0	$01	1	$00	0	1
6	61	Speed 10	$023	35	$DAC	3500	$8CA	2250	1
6	62	Speed 20	$023	35	$DAC	3500	$190	400	1
6	63	Speed 30	$023	35	$DAC	3500	$2FE	766	1
6	64	Speed 40	$023	35	$DAC	3500	$4E2	1250	1
6	65	Maximum speed	$023	35	$DAC	3500	$BB8	3000	1
6	66	Positioning speed	$23	35	$FA	250	$5A	90	1
7	70	P - divisor	$01	1	$14	20	$0A	10	1
7	71	I - divisor	$01	1	$28	40	$06	6	1
7	72	Stop segment	$00	0	$32	50	$06	6	1
E	E0	Read out actual position	$00	0	$FF	255	-------		-
E	E1	Read out speed	$0000	0	$0FFF	4095	-------		-
E	E2	Run-out angle	$00	0	$32	50	$06	6	1
E	E3	Communication monitoring	$00	0	$FF	255	$00	0	1
F	F0	Entry 1 (series no.)	$0000	0	$FFFF	65535	$0000	0	1
F	F1	Entry 2 (workplace)	$0000	0	$FFFF	65535	$0000	0	1
F	F2	Working hours	$0000	0	$FFFF	65535	$0000	0	1
F	F3	Entry 3 (reparation)	$0000	0	$FFFF	65535	$0000	0	1
F	FA	P.c.b. no.	Text 12		Text 12		-------		-
F	FB	Control box no.	Text 8		Text 8		-------		-
F	FC	EFKA type	Text 8		Text 8		-------		-
F	FD	EFKA date code	Text 8		Text 8		-------		-
F	FE	Software status	Text 8		Text 8		-------		-
F	FF	Module address	$F0	240	$FF	255	$F0	240	1

GROUP	NO	DESCRIPTION	Bit - 7	6	5	4	3	2	1	0
0	00	Communication byte	BCC	TIM	---	NOI	ZUG	BER	---	LST
0	01	Error byte	XOF	PNV	BLCK	NETZ	---	---	SOFT	HARD
0	02	Status byte 1	PSYN	NPE	RDY	PO1	PO2	POE	DZE	STP
0	03	Status byte 2	---	180	P3A	P3E	P2A	P2E	P1A	P1E
0	04	Control byte 1	NPA	STP3	STP2	STP1	V2	V1	DRI	RES
0	05	Control byte 2	---	---	PNLIM	PDST2	PDST1	ZSTP	2N	P2T
0	08	Status byte 3	PED+	PED0	PED-1	PED-2	PEDD	PEDC	PEDB	PEDA
0	0F	Interrupt control byte	TIQ2	ZIQ2	TIQ1	ZIQ1	SIQ2	EIQ2	SIQ1	EIQ1

GROUP	NO	DESCRIPTION	Bit - 7	6	5	4	3	2	1	0
2	25	Inputs to +5/24V	in3	in5	in7	in8	in2	in6	in9	i10
2	26	Inputs to +5/24V	---	---	---	---	---	---	in4	in1
2	28	Inputs to +0V	in3	in5	in7	in8	in2	in6	in9	i10
2	29	Inputs to +0V	---	---	---	---	---	---	in4	in1
2	2B	Outputs	M11	M4	M2	M5	M3	M1	VR	FL
2	2C	Outputs	---	---	---	M10	M7	M8	M9	M6
2	2E	Analog input 1	0...255 corresponds to 0...5V supply voltage							
2	2F	Analog input 2	0...255 corresponds to 0...5V supply voltage							

BCC	=	Block check error	PO2	= Is in position 2	ZSTP_	=	Disengage accurate stop
TIM	=	Time-out error	POE	= Position reached	2N	=	Double speed
NOI	=	Noise error	DZE	= Speed reached	P2T	=	Single impulse of position 2
ZUG	=	Access not permitted	STP	= Motor at standstill	PED+	=	Pedal pushed forward
BER	=	Overflow	180	= 180° window reached	PED0	=	Pedal in off-position
LST	=	List is transmitted	P3A	= Position 3A reached	PED-1	=	Pedal position -1
XOF	=	Transfer interrupted	P3E	= Position 3E reached	PED-2	=	Pedal position -2
PNV	=	Param. does not exist	P2A	= Position 2A reached	PEDD	=	Pedal contact D closed
BLCK	=	Motor overstrained, blocked	P2E	= Position 2E reached	PEDC	=	Pedal contact C closed
NETZ	=	Line voltage too low	P1A	= Position 1A reached	PEDB	=	Pedal contact B closed
SOFT	=	Software error	P1E	= Position 1E reached	PEDA	=	Pedal contact A closed
HARD	=	Hardware error	NPA	= Got to reference point	TIQ2	=	Timer bit IRQ2
PSYN	=	Position transmitter synchronized	STP3	= Stop bit 3	ZIQ2	=	Counter bit IRQ2
NPE	=	Reference point reached	STP2	= Stop bit 2	TIQ1	=	Timer bit IRQ1
RDY	=	Drive is ready	STP1	= Stop bit 1	ZIQ1	=	Counter bit IRQ1
PO1	=	Is in position 1	V2	= Speed bit 2	SIQ2	=	Transmit IRQ2
PNLIM	=	Limited speed (when using pedal)	V1	= Speed bit 1	EIQ2	=	Receive IRQ2
PDST1	=	Pedal stop bit 1	DRI	= Direction of rotation	SIQ1	=	Transmit IRQ1
PDST2	=	Pedal stop bit 2	RES	= Software reset	EIQ1	=	Receive IRQ1

10. ASCII Data Transfer

The comnplete transfer of a protocol is done in ASCII.

Example: Parameter 61 = $8CA = 2250 2 RPM (speed 10 = 4500 1 RPM)

ASCII value	of 6	= 54 decimal	=	**$36** hexadecimal
	of 1	= 49 decimal	=	**$31** hexadecimal
	of (=)	= 61 decimal	=	**$3D** hexadecimal
	of 8	= 56 decimal	=	**$38** hexadecimal
	of C	= 67 decimal	=	**$43** hexadecimal
	of A	= 65 decimal	=	**$41** hexadecimal

The data link establishment for parameter 61 = $8CA must therefore be as follows:

SOH	ADR	STX	(6	1	=	8	C	A)	ETX	BCC
$01	$F0	$02	$36	$31	$3D	$38	$43	$41	$03	$F1

11. List Recall

All marginal conditions of each parameter can be queried by a list recall.

GROUP	NO	DESCRIPTION	BIT -7	6	5	4	3	2	1	0
0	00	Communication byte	BCC	TIM	---	NOI	ZUG	BER	---	**LST**

The value of a parameter is transmitted back to the master by the information transfer.

Example:

Master transmits	SOH	ADR	STX	(Parameter no.)	ENQ	
Slave transmits	SOH	ADR	STX	(Parameter value)	ETX	BCC

If the bit **LST** is set at 1 in the communication byte before the information transfer, not only the value of the parameter but all marginal conditions are transmitted in the form of a list.

Example:

Master transmits	SOH	ADR	STX (Communication byte = xxxxxxx1)	ETX	BCC
Slave transmits	ADR	ACK	If telegram o.k.		
	ADR	NAK	In case of error		

Thus the bit **LST** is set at 1 in the communication byte.
Then the Master requests an information transfer:

Master transmits	SOH	ADR	STX	(Parameter no.)	ENQ
Slave transmits	SOH	ADR	STX	**(LIST)** ETX	BCC

In response to an information transfer a list is always transmitted until the master resets the bit **LST** in the communication byte.

LIST means in this case:

Parameter = Value,Minimum,Maximum,Step,Preset,Access
The list values are divided by commas (ASCII $2C) during transfer !

12. Interrupt Control

Parameter 0F		- Interrupt Control Byte
Bit 0	= 1	Receive interrupt line 1 (IRQ1)
Bit 1	= 1	Transmit interrupt line 1
Bit 2	= 1	Receive interrupt line 2 (IRQ2)
Bit 3	= 1	Transmit interrupt line 2
Bit 5/4	= 00	IRQ1 Delay with counter 1 (parameter 4C)
	= 01	IRQ1 Delay with counter 1, then with timer 1 (parameter 4D)
	= 10	IRQ1 Delay with timer 1, then with counter 1
	= 11	IRQ1 Delay with counter 1
Bit 7/6	= 00	IRQ2 Delay with counter 2 (parameter 4E)
	= 01	IRQ2 Delay with counter 2, then with timer 2 (parameter 4F)
	= 10	IRQ2 Delay with timer 2, then with counter 2
	= 11	IRQ2 Delay with counter 2

If bits 0 - 3 of this control byte is set the next arriving command will be linked with the interrupt request.

Example 1: Interrupt Control Byte = 00110001 = bit 0 -receive interrupt line 1
= bit 4/5 -delay with timer 1

In case of a subsequent data link transfer, e.g. in order to stop the drive in position 1, this command will be executed only if IRQ1 becomes active and after the delay with timer 1.

Example 2: Interrupt Control Byte = 11001000 = bit 3 -transmit interrupt line 2
= bit 6/7 -delay with Timer 2

When an information transfer for a status byte is requested, the updating of a certain bit within the status byte is signalled by setting IRQ2 after the delay with timer 2.
An interrupt is triggered by the status modification of a bit in the status byte if it is selected in the following manner:

GROUP	NO	DESCRIPTION	BIT - 7	6	5	4	3	2	1	0
0	02	Status Byte 1	---	NPE	RDY	PO1	PO2	POE	DZE	STP

The interrupt is to be triggered, when the drive is in position 1. This is done by a data link establishment for the status byte bit 4. The master transmits **the text "02 = 00010000"** and hereby determines that an interrupt is to be triggered, when bit 4 changes from 0 to 1.
If an interrupt is to be triggered, when the drive is no longer in position 1, the master transmits the text **"02 = 11101111"**. The interrupt is triggered, when bit 4 changes from 1 to 0.

Note
Only one interrupt per line can be released by the master control.

The pulse length of an interrupt is 100 µs.

13. Examples for Serial Data Transfer

13.1 Power On

Before power on, ensure that the right baud rate was selected by jumpers in the plug.
After power on and/or restart, the control needs approx. 2 seconds to be ready for operation. This status is transmitted by means of **bit 5 in status byte 1**.

GROUP	NO	DESCRIPTION	BIT - 7	6	5	4	3	2	1	0
0	02	Status Byte 1	PSYN	NPE	**RDY**	PO1	PO2	POE	DZE	STP

Example:	Query for readiness for operation after power on (information transfer parameter 2)					
	Master transmits	SOH	ADR	STX	($30 $32)	ENQ
	Slave transmits	SOH	ADR	STX	($30 $32 $3D $xx $xx) ETX	BCC
	The master recognizes the readiness for operation from bit 5.					

13.2 Operation

Example: Sequence of the speed profile below

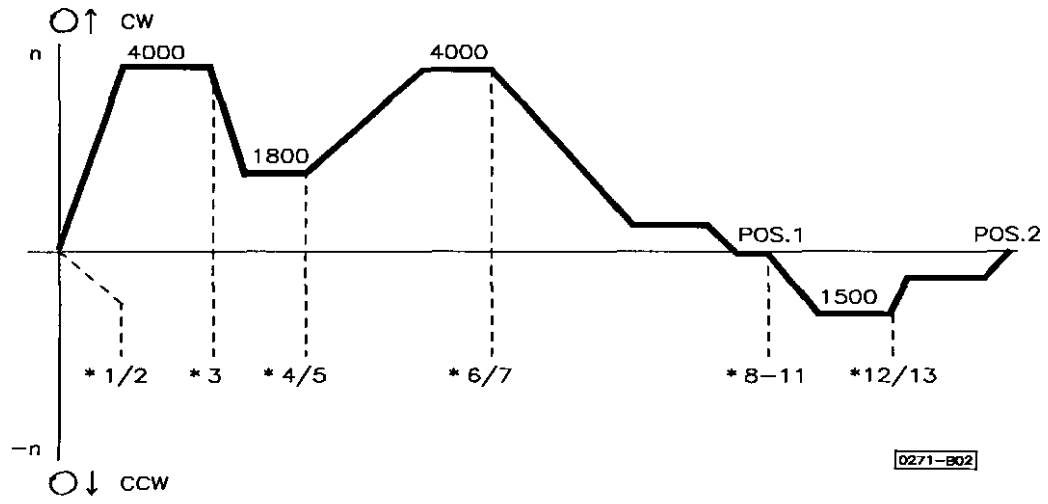

* = **Step**

Step 1	Determine speed1 = 4000 [1 RPM]				Control value A	Parameter10 = 2000 [2 RPM]		
Master	SOH	ADR	STX	($31 $30 $3D $37 $44 $30)			ETX	BCC
Slave	ADR	ACK						

Step 2	**Drive is supposed to run. Setting by control byte 04**					
	No reset	Control Byte 04	bit0 - RES	= 0		
	Determine direction of rotation		bit1 - DRI	= 0		
	Select speed1		bit2 - V1	= 0		
			bit3 - V2	= 0		
	Motor is supposed to run		bit4 - STP1	= 0		
			bit5 - STP2	= 0		
			bit6 - STP3	= 0		
	Do not go to reference point		bit7 - NPA	= 0		
Master	SOH	ADR	STX	(04 = 00)	ETX	BCC
Slave	ADR	ACK				

Drive runs at 4000 RPM

Step 3	Determine speed1 = 1800 [1 RPM]				Control value A	Parameter10 = 900 [2 RPM]		
Master	SOH	ADR	STX	($31 $30 $3D $33 $38 $34)			ETX	BCC
Slave	ADR	ACK						

Drive runs at 1800 RPM

Step 4	Reduce acceleration				Control value A	Parameter18 = 10		
Master	SOH	ADR	STX	($31 $38 $3D $30 $41)			ETX	BCC
Slave	ADR	ACK						

Step 5	Determine speed1 = 4000 [1 RPM]				Control value A	Parameter10 = 2000 [2 RPM]		
Master	SOH	ADR	STX	($31 $30 $3D $37 $44 $30)			ETX	BCC
Slave	ADR	ACK						

The drive accelerates with flat edge to 4000 RPM

Step 6	Reduce braking ramp 3				Control value A	Parameter1A = 10		
Master	SOH	ADR	STX	($31 $41 $3D $30 $41)			ETX	BCC
Slave	ADR	ACK						

Step 7	**Drive is supposed to stop in position 1. Setting by control byte 04**					
	No reset	Control Byte 04	bit0 - RES	= 0		
	Determine direction of rotation		bit1 - DRI	= 0		
	Select speed 1		bit2 - V1	= 0		
			bit3 - V2	= 0		
	Drive is supposed to stop in pos.1		bit4 - STP1	= 0		
			bit5 - STP2	= 1		
			bit6 - STP3	= 0		
	Do not go to reference point		bit7 - NPA	= 0		
Master	SOH	ADR	STX	(04 = $20)	ETX	BCC
Slave	ADR	ACK				

The drive moves to position 1 while braking slightly and then stops.

Step 8	Determine speed1 = 1500 [1 RPM]				Control value A	Parameter10 = 750 [2 RPM]	
Master	SOH	ADR	STX	($31 $30 $3D $32 $45 $45)		ETX	BCC
Slave	ADR	ACK					

Step 9	Increase acceleration				Control value A	Parameter18 = 30	
Master	SOH	ADR	STX	($31 $38 $3D $31 $45)		ETX	BCC
Slave	ADR	ACK					

Step 10	Increase braking ramp 3				Control value A	Parameter1A = 80	
Master	SOH	ADR	STX	($31 $41 $3D $35 $30)		ETX	BCC
Slave	ADR	ACK					

Step 11	**Drive is supposed to run to the opposite direction of rotation. Setting by control byte 04**						
	No reset				Control Byte 04	bit0 - RES	= 0
	Change direction of rotation					bit1 - DRI	= 1
	Select speed 1					bit2 - V1	= 0
						bit3 - V2	= 0
	Drive is supposed to run					bit4 - STP1	= 0
						bit5 - STP2	= 0
						bit6 - STP3	= 0
	Do not go to reference point					bit7 - NPA	= 0
Master	SOH	ADR	STX	($30 $34 $3D $30 $32)		ETX	BCC
Slave	ADR	ACK					

The drive runs to the opposite direction of rotation at 1500 RPM.

Step 12	**Drive is supposed to stop in position 2. Setting by control byte 04**						
	No reset				Control Byte 04	bit0 - RES	= 0
	Change direction of rotation					bit1 - DRI	= 1
	Select speed 1					bit2 - V1	= 0
						bit3 - V2	= 0
	Drive is supposed to stop in pos.2					bit4 - STP1	= 1
						bit5 - STP2	= 1
						bit6 - STP3	= 0
	Do not go to reference point					bit7 - NPA	= 0
Master	SOH	ADR	STX	($30 $34 $3D $33 $32)		ETX	BCC
Slave	ADR	ACK					

Step 13	**Query as to whether drive has reached the position. Query by status byte 02**					
Master	SOH	ADR	STX	($30 $32)	ENQ	
Slave	SOH	ADR	STX	($30 $32 $3D $xx $xx)	ETX	BCC

The status can be evaluated by the master control.
The query of the status byte requires constant polling by the master.
In order to avoid this the slave must be required to signal by interrupt when the position is reached.

Step A:	Interrupt Timer IRQ1 - Set parameter 4D at 20ms					
Master	SOH	ADR	STX	($34 $44 $3D $31 $34)	ETX	BCC
Slave	ADR	ACK				

Example: Reaching the position is signalled by interrupt after a delay of 20 ms.

Step B:	Provide interrupt line 1 for slave by interrupt control byte 0F.					
	No reception IRQ1		Interrupt Byte 0F	bit0 - EIQ1	= 0	
	Transmit on IRQ1			bit1 - SIQ1	= 1	
	No reception IRQ2			bit2 - EIQ2	= 0	
	No transmission IRQ2			bit3 - SIQ2	= 0	
	With delay IRQ1			bit4 - ZIQ1	= 1	
				bit5 - TIQ1	= 1	
	Without delay IRQ2			bit6 - ZIQ2	= 0	
				bit7 - TIQ2	= 0	
Master	SOH	ADR	STX	($30 $46 $3D $33 $32)	ETX	BCC
Slave	ADR	ACK				

Step C:	Selection of bit 2 in the status byte 1 for triggering the interrupt, when position is reached					
Master	SOH	ADR	STX	($30 $32 $3D $30 $34)	ETX	BCC
Slave	ADR	ACK				

Step D	Drive is supposed to stop in position 2. Setting by control byte 04					
	No reset		Control Byte 04	bit0 - RES	= 0	
	Change direction of rotation			bit1 - DRI	= 1	
	Select speed 1			bit2 - V1	= 0	
				bit3 - V2	= 0	
	Drive is supposed to stop in pos. 2			bit4 - STP1	= 1	
				bit5 - STP2	= 1	
				bit6 - STP3	= 0	
	Do not go to reference point			bit7 - NPA	= 0	
Master	SOH	ADR	STX	($30 $34 $3D $33 $32)	ETX	BCC
Slave	ADR	ACK				

When bit 2 in status byte1 changes from 0 to 1, the time IRQ1 = 20ms is started and the interrupt IRQ1 is triggered by the slave.
The master can identify whether the position is reached without polling by receiving interrupt 1.

14. Position Settings

GROUP	NO	DESCRIPTION	MINIMUM	MAXIMUM	PRESET	STEP
5	50	Position1E	$00	$FF	$80	1
5	51	Position1A	$00	$FF	$8A	1
5	52	Position2E	$00	$FF	$00	1
5	53	Position2A	$00	$FF	$0A	1
5	54	Position3E	$00	$FF	$C0	1
5	55	Position3A	$00	$FF	$CA	1

GROUP	NO	DESCRIPTION	BIT - 7	6	5	4	3	2	1	0
0	02	Status Byte 1	PSYN	NPE	RDY	PO1	PO2	POE	DZE	STP
0	03	Status Byte 2	---	180	P3A	P3E	P2A	P2E	P1A	P1E
0	04	Control Byte	NPA	STP3	STP2	STP1	V2	V1	DRI	RES

NPE = Reference point reached
PO2 = Is in Position 2
180 = 180° window reached
P3E = Position 3E reached
P2E = Position 2E reached
P1E = Position 1E reached
NPA = Go to reference point
STP2 = Stop bit 2

PO1 = Is in position1
POE = Position reached
P3A = Position 3A reached
P2A = Position 2A reached
P1A = Position 1A reached

STP3 = Stop bit 3
STP1 = Stop bit 1

15. Acoustic Signals

15.1 Acoustic Error Signals

Note:
Whenever an error signal is emitted, the drive is made to stop. The error signal can be heard until the drive is turned off.

ERROR 1: **Position transmitter error**
(1 short, 1 long signal)

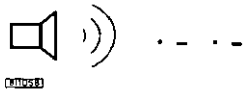

- Position transmitter defective or not connected
- Position transmitter not mounted on the sewing machine shaft

ERROR 2: **Mains interruption**
(2 short, 1 long signal)

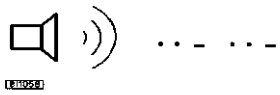

- Brief interruption of the mains supply (up to approx. 2 sec.)
- Loading relay is not switched

ERROR 3: **Blocking control**
(3 short, 1 long signal)

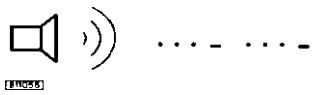

- Sewing machine shaft does not move despite motor activation
- Set speed is not reached

ERROR 4: **Processor breakdown (illegal opcode)**
(4 short, 1 long signal)

- Microprocessor does not work properly
  - Disturbances from outside (e.g. sewing machine head not grounded, line voltage disturbed)
  - Hardware malfunction on the computer printed circuit board

ERROR 5: **Commutation transmitter error**
(5 short, 1 long signal)

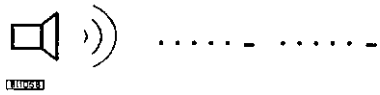

- Commutation transmitter defective

15.2 Acoustic Signals of the Module Address

If the pedal is not in position zero (neutral), when switching power on, the module address is emitted. The leading hexadecimal digit "F" is suppressed. At the preset address "F0" only a long beep is emitted after a long pause. At every other address the second hexadecimal digit determines the number of short beeps, e.g. **"F3": 3 short beeps, pause, long beep, long pause**. The phases of the error signals are considerably shorter.

16. Examples of Connections

Attention
Use shielded cables only.

16.1 Reset with External 24V Supply

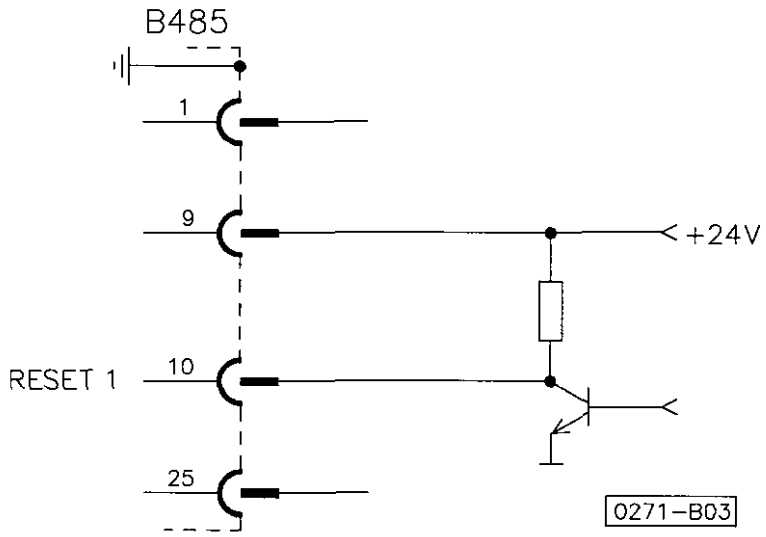

16.2 Reset with Optocoupler

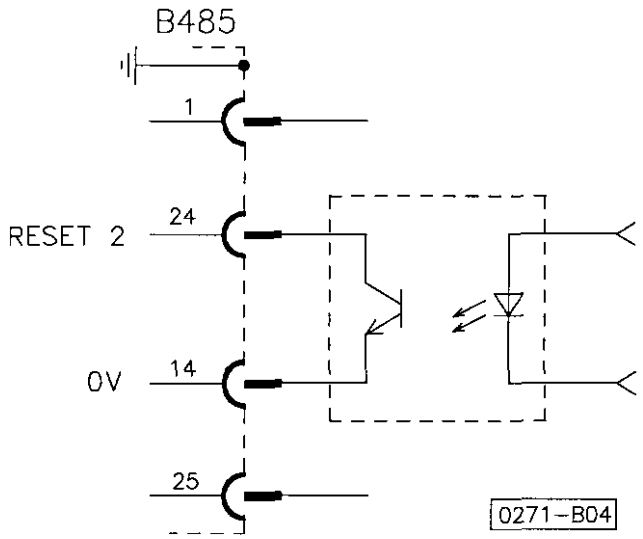

16.3 TRI-STATE Signals IRQ1 and IRQ2

(See also software agreements in chapter "Parameters"!)

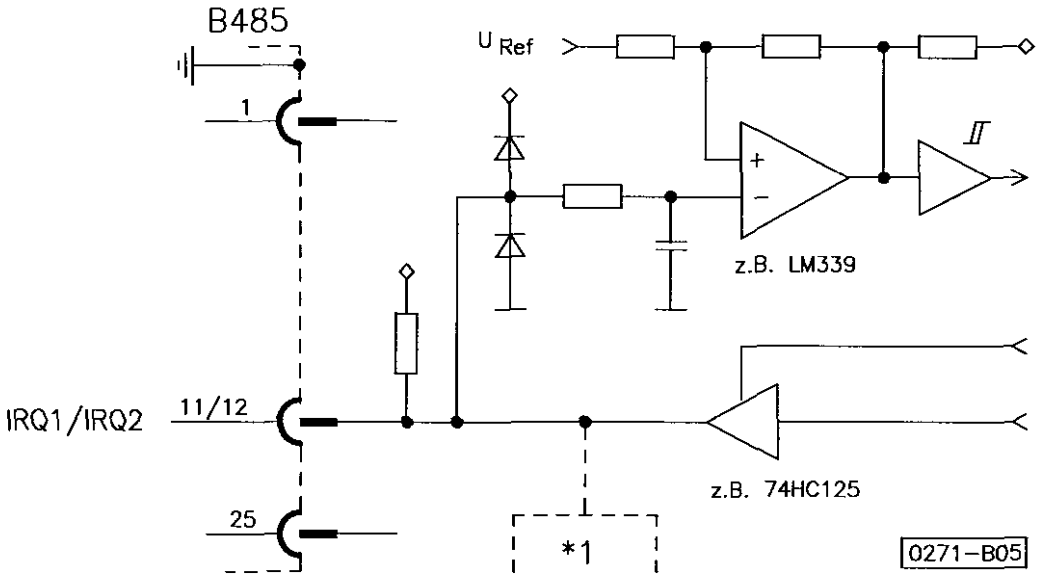

16.4 Signals U/D, STOP, SYN and G1

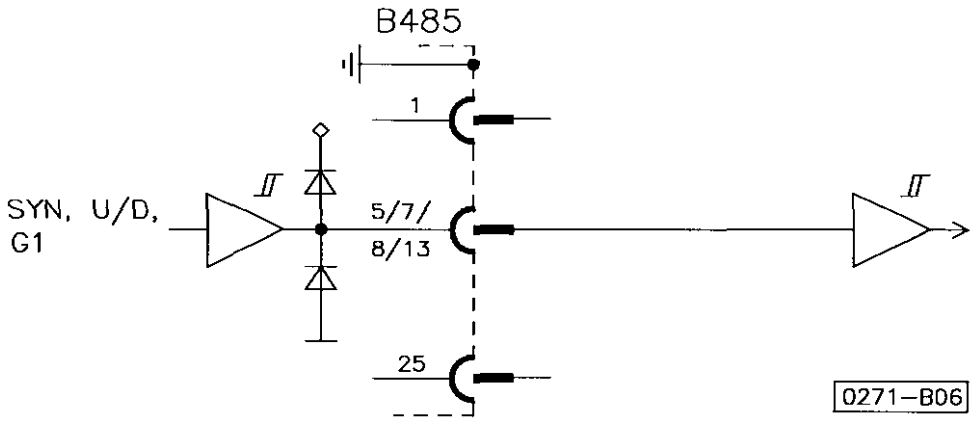

16.5 OPEN COLLECTOR Signals POS1 and ERROR

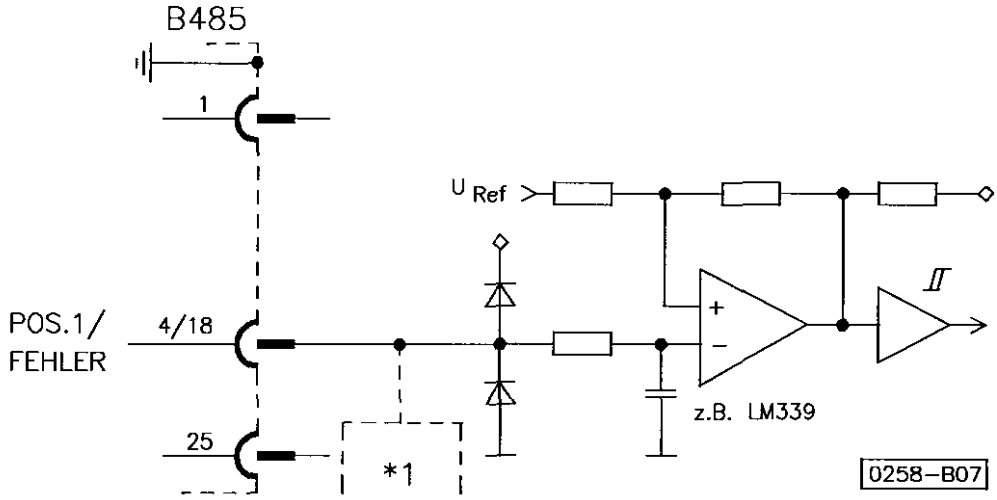

*1 = Further modules can be connected here!

16.6 Differential Signal Link

G1	=	Generator 512 impulses / rotation
POS2	=	Position 2
U/D	=	Clockwise/counterclockwise rotation

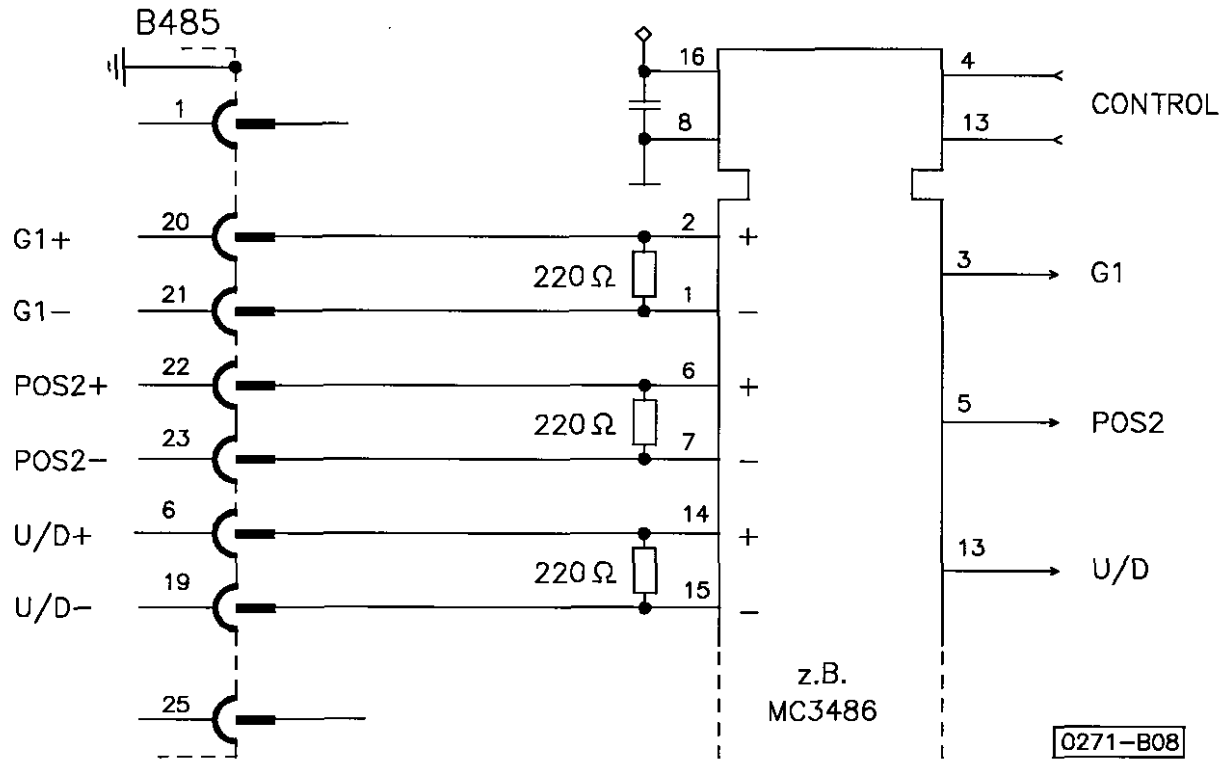

16.7 Data Transfer RS485 with One Drive

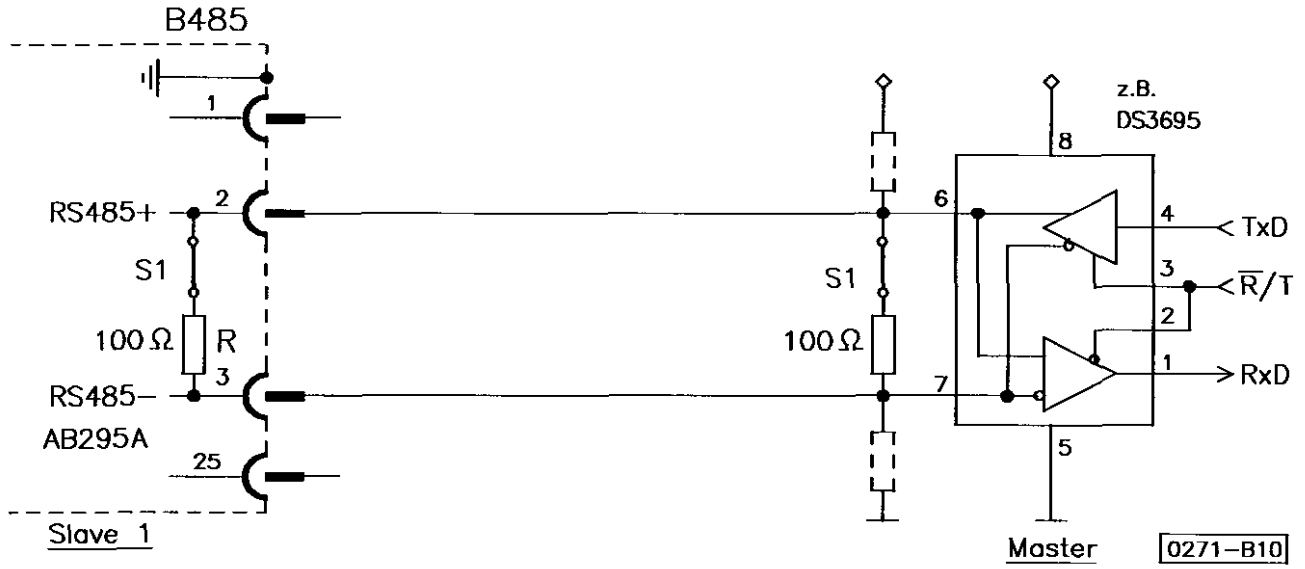

16.8 Data Transfer RS485 with Several Drives

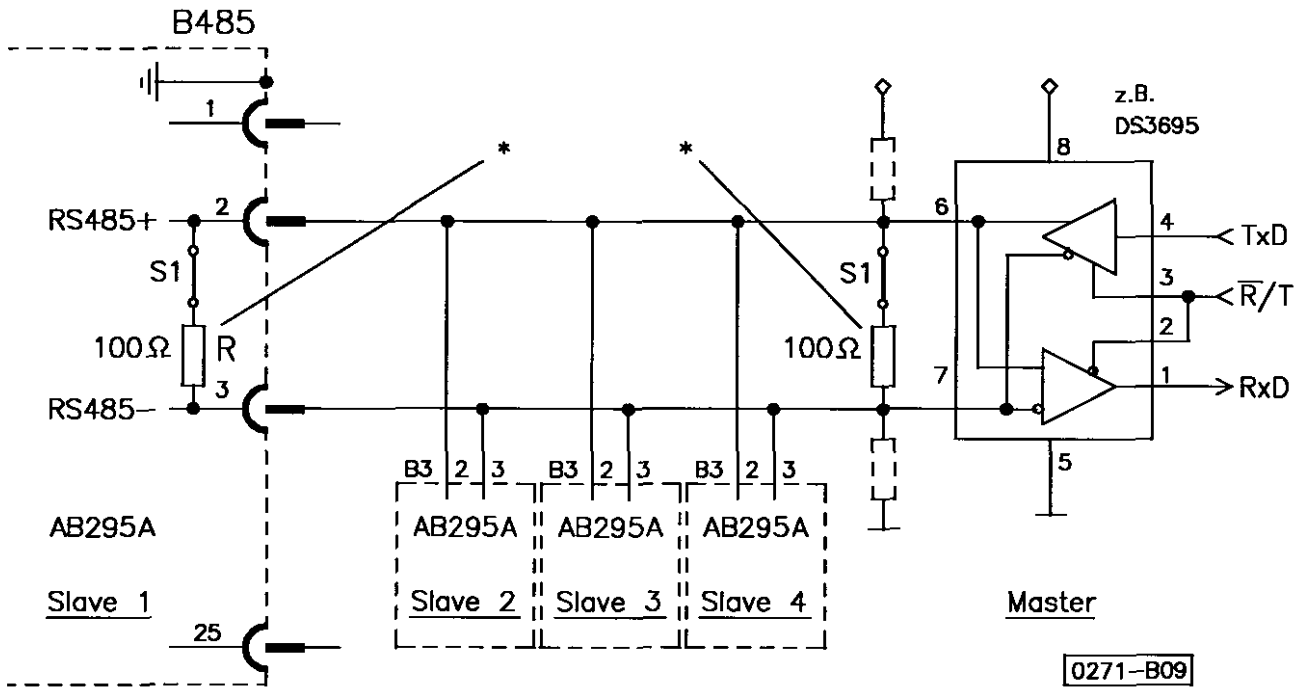

* = Jumper S1 for terminating resistors

Deactivate terminating resistors "**R**" on "slave 2, 3, 4" in control AB295A by means of a jumper!
Determine different addresses (max. 16) if several drives are connected.

16.9 Activate/Deactivate Terminating Resistor

- Disconnect mains
- Remove rear (component side) control cover after loosening the 4 screws
- Close jumper S1 (see figure in chapter "Socket Connectors") on small p.c.b. = terminating resistor is effective
- Open jumper S1 on small p.c.b. = terminating resistor is not effective
- Put cover on again and tighten the screws

Attention!
Before removing the cover, turn power off and remove mains plug from outlet!

For your notes:

Efka
FRANKL & KIRCHNER GMBH & CO KG
SCHEFFELSTRASSE 73 - D-68723 SCHWETZINGEN
TEL.: (06202)2020 - TELEFAX: (06202)202115
email: info@efka.germany.net - http://www.efka.germany.net

Efka
OF AMERICA INC.
3715 NORTHCREST ROAD - SUITE 10 - ATLANTA - GEORGIA 30340
PHONE: (770)457-7006 - TELEFAX: (770)458-3899 - email: efkaus@aol.com

Efka
ELECTRONIC MOTORS SINGAPORE PTE. LTD.
67, AYER RAJAH CRESCENT 05-03 - SINGAPORE 139950
PHONE: 7772459 - TELEFAX: 7771048 - email: efkas@cyberway.com.sg

1(1)-150499-A(402270EN)